GEN-4
EASY JIG®

80 PERCENT ARMS

MULTI-PLATFORM SYSTEM

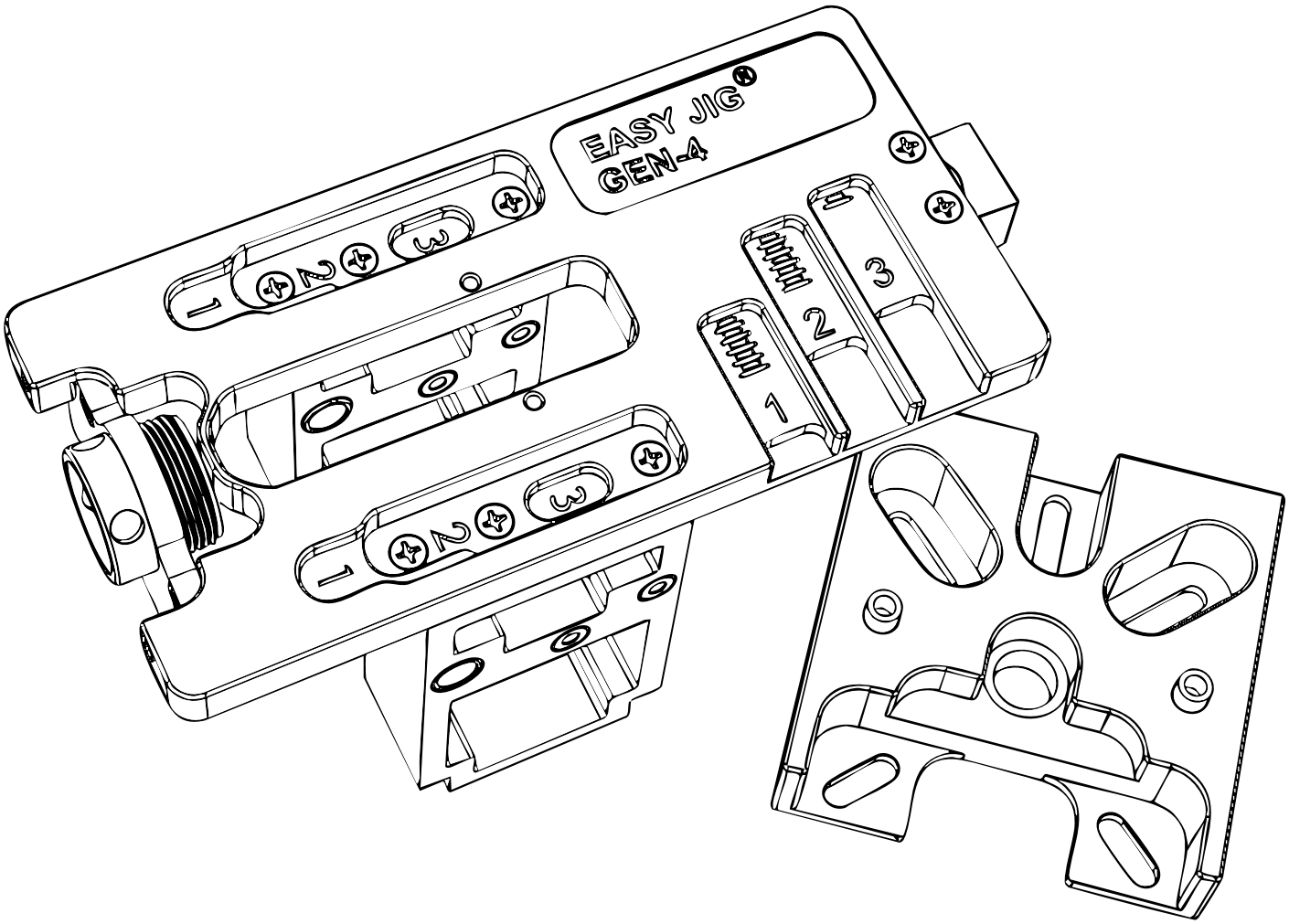

AR-15 • AR-9 • AR-45 • AR-10 • LR308

USER MANUAL

FORT WORTH, TEXAS

v1.1 (25.04.28)

TABLE OF CONTENTS

Advocacy..... 3
Welcome..... 4
Special Legal Notice..... 4
Important Legal Notice..... 4
Warning and Safety Notices..... 5
Parts and Tools..... 6
Jig Hardware..... 6
Router Adapter Plate Hardware..... 6
Required Tools..... 6
Read Carefully Before Starting..... 7
Jig Assembly..... 8
Pilot Hole Drilling..... 11
Router Adapter Plate (RAP) Installation..... 12
Alternate Router Adapter Plate Installation..... 14
Large Router Adapter Plate Installation..... 14
FCG Milling Step 1..... 15
FCG Milling Step 2..... 17
Trigger Slot Milling Step 3..... 17
Fire Selection and Pin Holes Drilling..... 18
Router Compatibility Chart..... 19
Router Tips..... 19
Final Finishing..... 20
Your Lower is Complete..... 20
Jig Warranty and Support..... 21
Lower Replacement Warranty..... 21
Trademark / Patents..... 21
Additional Images..... 22
Resources..... 24

ADVOCACY

At 80 Percent Arms, our commitment to the Second Amendment and the right to personally manufacture firearms goes beyond just providing you with the tools to build your own firearms. We've been at the forefront of making this right accessible to everyone through innovation and advocacy.

Our Journey in Innovation:
Since our inception, 80 Percent Arms has been dedicated to simplifying the process of building firearms at home. Our flagship product, the Easy Jig®, exemplifies this dedication. It's not just a tool; it's a revolution in how 80% lowers are milled. Designed to be the easiest, most user-friendly, and fool-proof jig on the market, the Easy Jig® has transformed the process into something that can be accomplished by anyone, even those without any machining experience, using only common household tools. With our patented technology, we've made it possible to complete an 80% lower quickly and accurately, bringing the art of gun building into the hands of every law-abiding American who values their right to bear arms.

Fighting for Your Rights:
Our advocacy doesn't stop at product development. We've been aggressively challenging federal and state regulations that threaten the right to build personally manufactured firearms. From battling the ATF's "ghost gun" rule to standing up against state laws that aim to criminalize or overly regulate the home building of firearms, we've spent millions in legal fees to ensure these rights are preserved. Our legal battles, including significant cases like VanDerStok et al. v. Garland, are fought with the belief that the right to manufacture firearms for personal use is a cornerstone of the Second Amendment.

Join the Movement:
We urge our customers to become part of this ongoing fight by supporting grassroots Second Amendment advocacy groups. Organizations like the Firearms Policy Coalition (FPC) and the Second Amendment Foundation (SAF) are crucial in this battle. These groups work tirelessly to defend your right to bear arms, fight against unconstitutional laws, and educate the public on the importance of these rights. By joining or supporting these organizations, you're not just defending your rights; you're helping to shape a future where those rights remain secure for generations to come.

Our Thanks to You:
We deeply appreciate your support. Every purchase from 80 Percent Arms not only brings you closer to the joy of building your own firearm but also directly contributes to our ability to fund legal battles and continue serving the builder community. Your commitment to this cause allows us to keep pushing back against regulatory overreach and to advocate for a future where the right to bear arms is both celebrated and protected.

Thank you for standing with us in this vital fight. Together, we're not only building firearms; we're building a legacy of freedom.

WELCOME

You have purchased the ultimate 80% lower router milling jig system on the market ensuring quality, precision, and durability for your builds. Our industry-leading patented technology functions effortlessly across platforms for milling all popular AR-15, pistol caliber AR, and .308 lowers without additional parts to purchase. This is the only jig you will ever need to finish your 80% lowers.

The GEN-4 Multi-Platform Easy Jig® features a mil-spec M16 FCG pocket. This feature does not create a fully-automatic firearm. Do not attempt to create a fully automatic firearm unless you are licensed to do so. Unlawful creation or conversion of a firearm to fully automatic firing is a felony.

PLEASE READ THE ENTIRE USER MANUAL BEFORE USING THIS PRODUCT TO AVOID INJURY, DAMAGE, AND TO ENSURE YOU CAN LEGALLY USE THIS PRODUCT.

SPECIAL LEGAL NOTICE

Due to recent ongoing regulatory changes by the ATF regarding the definition of firearm frames and receivers, the following new regulations may apply to you:

• An unfinished frame/receiver sold in conjunction with a jig may lead the ATF to classify it as a fully functional firearm, even before any modification or machining operations to the 80% frame/receiver take place.

• Product support, service, manuals, and replacement parts are prohibited from being provided by the manufacturers of jigs and frames or receivers and may only be available through an authorized dealer or retailer.

We regret for this inconvenience, which we believe is the result of unlawful and unconstitutional ATF action. Until a definitive ruling is reached against the ATF, these restrictions remain in effect. 80 Percent Arms actively challenges overreaching ATF regulations in court, with favorable rulings at both the district and appellate court levels. Updates will be posted when these restrictions are lifted.

IMPORTANT LEGAL NOTICE

It is a violation of federal law to build any firearm if you are prohibited from possessing firearms due to felony convictions or other legally disqualifying reasons.

This product may not be legal in your state. Please review your local, state, and federal laws to determine the legality of these products in your area before purchasing or using this product and be aware of any recent legal changes that may affect you.

By taking possession of this product, you certify that you are over the age of 21, you are legally allowed to build and own firearms, you will only use this product for lawful purposes, and you have confirmed that you can legally possess this product in your locality. If you do not meet these criteria, do not use or take possession of this product.

Misuse or mishandling of this product can result in severe injury or death to yourself and others. In no event shall the seller be liable for any direct, indirect, punitive, incidental, special, or consequential damages to property or life whatsoever, arising out of or connected with the use or misuse of this product.

We are not attorneys and are unable to provide legal advice.

Warning: Any attempt to create an automatic fire firearm is strictly illegal for individuals without the proper federal licenses and permissions. Federal law prohibits the manufacturing of new machine guns for personal use post-1986, and converting a semi-automatic firearm into a fully automatic one without legal authority is a felony. The inclusion of an M16 pocket in this jig is for educational or reference purposes only. Misuse of this jig to produce or modify firearms into automatic weapons can result in severe legal consequences, including imprisonment and fines. Ensure you understand and comply with all applicable local, state, and federal laws. Possession of an illegal machine gun conversion can lead to criminal charges even if the firearm is not fully assembled or operational.

WARNING AND SAFETY NOTICES

READ ALL INSTRUCTIONS AND WARNINGS BEFORE USING THE PRODUCT. DO NOT USE THIS PRODUCT IF YOU DO NOT UNDERSTAND THE INSTRUCTIONS AND WARNINGS. FAILURE TO CLOSELY READ AND COMPLY WITH LISTED INSTRUCTIONS AND WARNINGS MAY RESULT IN DAMAGE TO PROPERTY, SERIOUS INJURY, OR DEATH. DO NOT USE THIS PRODUCT IF YOU CANNOT LAWFULLY PURCHASE A FIREARM. USE OF THIS PRODUCT BY A PROHIBITED PERSON MAY RESULT IN CRIMINAL CHARGES AND INCARCERATION.

The manual QR code card or a printed copy of this manual must always accompany your jig and be transferred with it upon change of ownership.

Using this product on an 80% lower will convert the 80% lower into a firearm. Even if the 80% lower is not fully milled to completion, it will still be legally considered a firearm. It is your responsibility to comply with all federal, state and local laws and regulations regarding the ownership, possession, and transportation of a firearm with lowers milled with this product. Certain configurations of the lower created by the end-user with an upper may subject the firearm to classification under the National Firearms Act, which imposes registration, taxes, and other requirements on the owners of such firearms.

Working with power tools and cutting metal are inherently dangerous. Use eye and hearing safety protection and follow all safety instructions provided by the power tool's manufacturer. By using this product you agree that you are aware of these risks, and agree not to hold 80 Percent Arms liable for any injuries or property damage that may occur through the use of our products. Proceed at your own risk.

80 Percent Arms warns all users of our products to exercise extreme caution in the handling of any firearm. Because any firearm is potentially dangerous, the user should successfully complete a recognized firearms safety course before handling or employing any firearm. Before attaching your finished lower receiver to an upper receiver, ensure that the safety and trigger mechanisms are functioning properly. This must be done before the lower receiver is attached to an upper receiver or made capable of firing. If you are not an experienced gunsmith, please take your completed lower receiver to a licensed gunsmith who can ensure that it is functioning properly, and that the safety is in good working order. Remember, you are the most important safety device when it comes to the safe handling of your firearms. By using our product you further agree that 80 Percent Arms will not be held liable for any personal injury, death or property damage that results from the use of any firearm created with our products. If you do not agree to these terms, please do not use this product, and contact your dealer or retailer to return your unused product for a refund.

Under no circumstances shall 80 Percent Arms be liable for incidental or consequential damages with respect to economic loss, injury, death or property damage, whether as a result of breach of warranty, negligence or otherwise. Some states do not allow the exclusion or limitation of incidental or consequential damages, so the above limitation or exclusion may not apply to you.

PARTS AND TOOLS

JIG HARDWARE

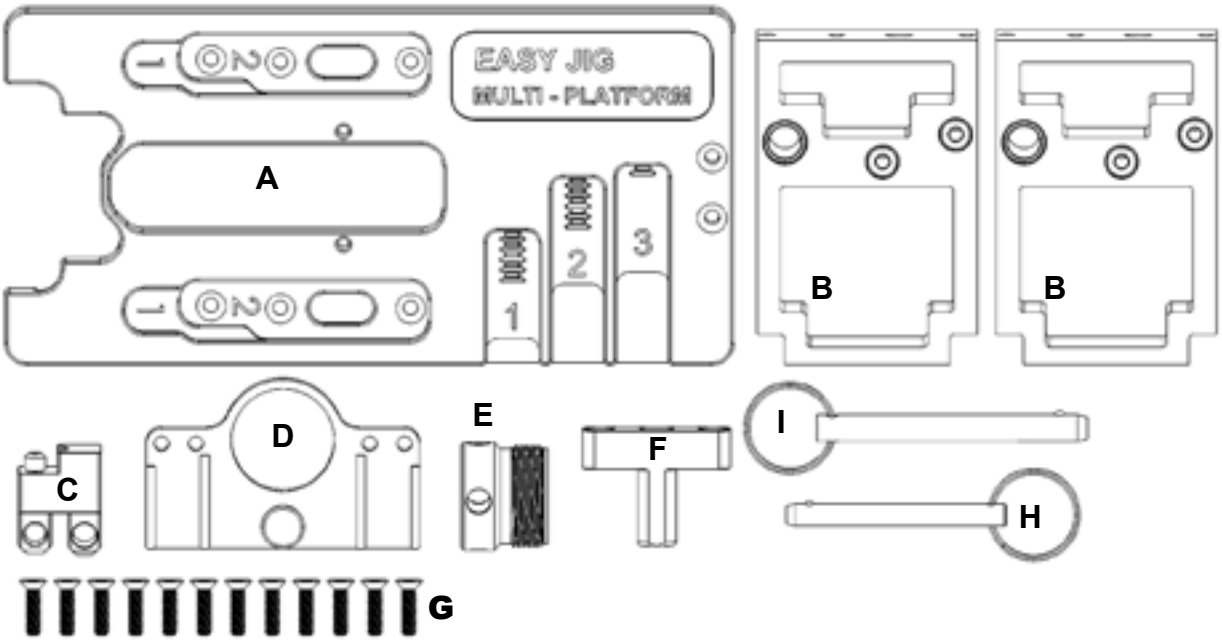

A - TOP PLATE	F - DRILL BLOCK
B - SIDE WALL (x2)	G - JIG SCREWS 8-32 x 5/8 (x12)
C - PIVOT ADAPTER BLOCK	H - AR15 QUICK RELEASE PIN
D - BUFFER SUPPORT PLATE	I - 308 QUICK RELEASE PIN
E - BUFFER SCREW	N/A

ROUTER ADAPTER PLATE HARDWARE

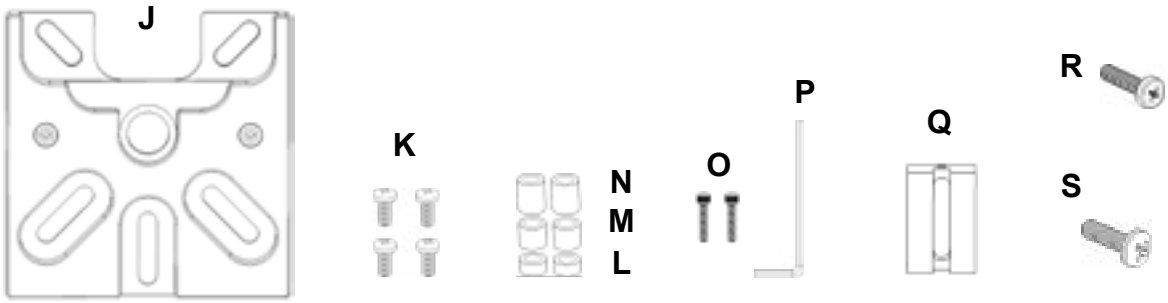

J - ROUTER ADAPTER PLATE (RAP)	P - HEX KEY 7/64”
K - ROUTER ADAPTER SCREWS M4x0.7x10 (x4)	Q - ROUTER SIDE BLOCK ADAPTER
L-M-N - GUIDE PIN SMALL (x2) MED (x2) LARGE (x2)	R - SIDE BLOCK SCREW M5x0.8x20 CHEESE HD
O - GUIDE PIN SCREWS #6-32 x 1/2” (x2)	S - SIDE BLOCK SCREW M6x1.0x20 PAN HEAD

REQUIRED TOOLS

1. EYE PROTECTION	6. VISE (3” OR LARGER JAWS)
2. EAR PROTECTION	7. DRILL BITS (3/8”, 21/64”, and 5/32”)
3. ROUTER	8. SCREW DRIVER
4. SPEEDMILL TM	9. SHOP VAC
5. HAND DRILL or DRILL PRESS	10. CUTTING FLUID

READ CAREFULLY BEFORE STARTING

• Wear impact resistant ANSI Z87.1 approved eye protection and ANSI S3.19 approved ear protection at all times when operating any power tools.

• Check that the lock/latch on your router's adjustable base is tight and functioning properly. If it is not secured and moves or slips while milling, damage can occur to the lower receiver or jig as well as possible harm to self.

• Set the router to the highest speed setting if using a variable speed router.

• Do not exceed cutting more than 1 hash mark increment per pass as the hash marks on the depth gauges denote the maximum recommended depth of cut. Attempting to mill too much material can result in damage. The less material cut per pass, the better the finish. Beginners and those seeking maximum finish quality should make milling passes at less than half of a hash mark.

• Apply cutting fluid liberally to the receiver and SpeedMill™ before milling each pass. (WD-40 is not recommended but may be used if applied liberally.)

• Before turning the router on to start each new pass, check that the router is centered within the pilot hole and not touching any part of the lower receiver.

• Hold the router firmly with both hands. Apply and maintain moderate downward pressure at all times when milling.

• Keep the Router Adapter Plate flat against the Top Plate at all times and do not allow the router to tilt or lift while milling.

• Move the router slowly and smoothly in small clockwise circles to mill and avoid abrupt motions. Best results are achieved by milling at a smooth and slow pace.

• Slow down and take extra care when milling the corners of the template. Corners engage more material with the SpeedMill™ and can cause it to jump if moving too rapidly.

• Slow down and/or take shallower depths of cut if the router begins to chatter.

• Wait until the router comes to a COMPLETE stop before lifting the router off the jig. Never insert or remove the router while it is spinning. Lifting the router off the jig while it is still spinning will cause damage to the jig and your lower which is not covered under warranty.

• Remove chips after completing each pass to prevent galling. Do not use compressed air to blow or clear chips to prevent sharp flying debris. Use a shop vac to clear and remove chips.

• Periodically check that the Buffer Screw and Jig Screws are securely fastened during jig use.

JIG ASSEMBLY

Align the Buffer Support Plate [**D**] with the back of the lower receiver, ensuring the indexing protrusion and ribs are facing the lower receiver.

Loosely finger thread the Buffer Screw [**E**] through the Buffer Support Plate [**D**] into the lower receiver to fasten the Buffer Support Plate against the back of the lower. Set aside for now.

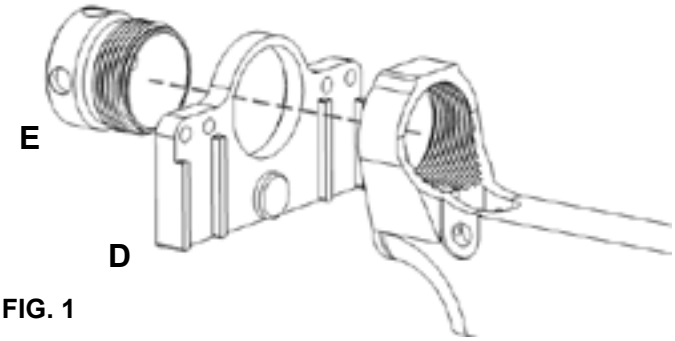

FIG. 1

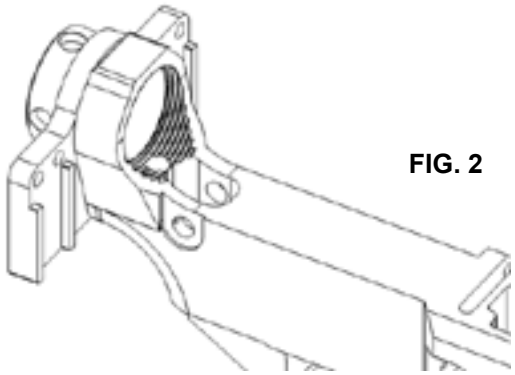

FIG. 2

Attach the Pivot Adapter [**C**] to the Top Plate [**A**] securely using 2 Jig Screws [**G**].

Orient ambidextrous Side Walls [**B**] with larger 3/8” bushings to the rear and set Top Plate [A] atop Side Walls with the numeral “3” visible through the Top Plate.

Loosely attach both Side Walls [**B**] to the Top Plate [**A**] using 6 Jig Screws [**G**]. Walls should wiggle slightly when moved.

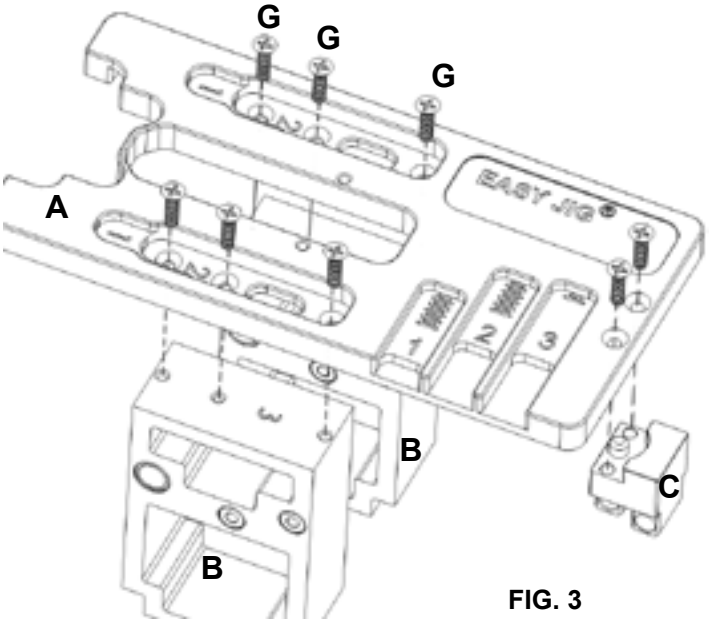

FIG. 3

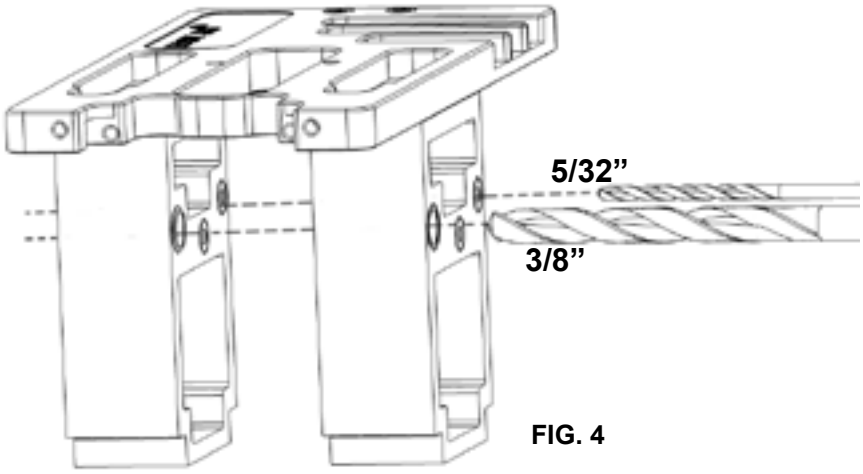

FIG. 4

Insert 3/8” (biggest) and 5/32” (smallest) drill bits through the most rearward and forward bushings, respectively, of both Side Walls [**B**] for alignment.

Tighten the Side Walls [**B**] to the Top Plate [**A**] using the previously loosely threaded 6 Jig Screws [**G**] and remove the aligning drill bits.

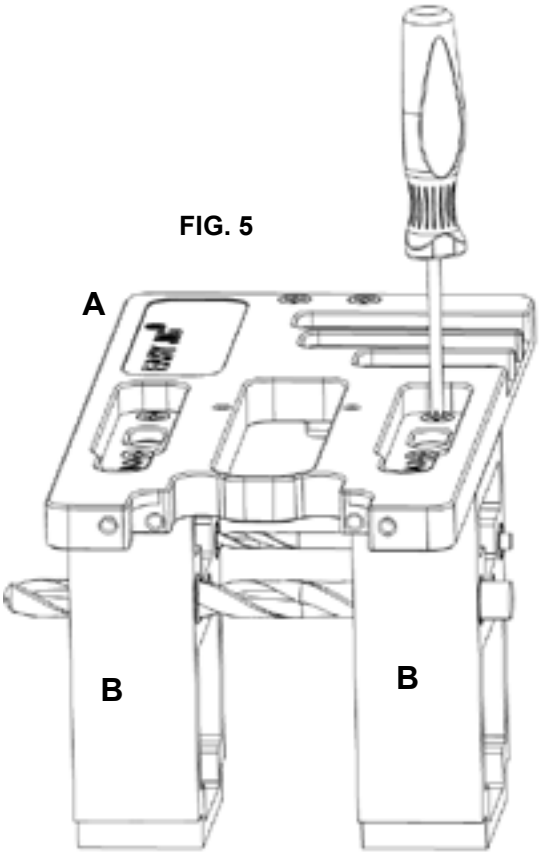

FIG. 5

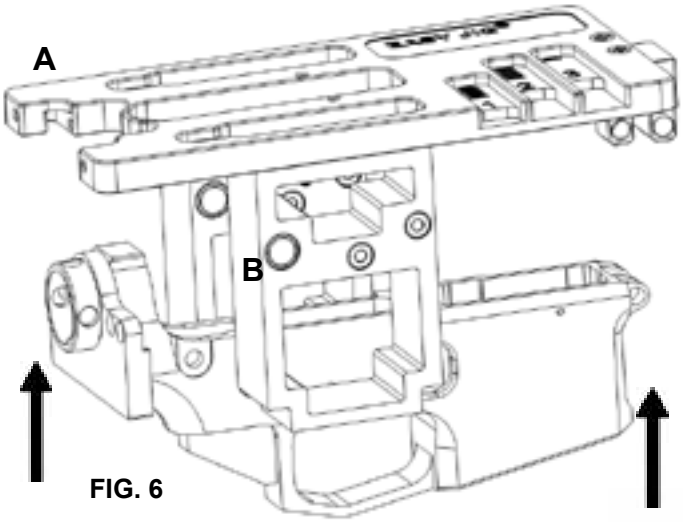

FIG. 6

Insert the receiver assembly into the jig assembly directly upwards from the bottom of the Side Walls [**B**] towards the Top Plate [**A**].

Align the lower receiver's pivot pin holes with the Pivot Adapter [**C**], and insert a Quick Pin [**H**] for AR15 or [**I**] for AR10 through the lower receiver and Pivot Adapter.

For AR15/9/45, use the smaller rearward Pivot Adapter hole and SILVER Quick Pin.
For AR10/LR308, use the larger forward Pivot Adapter hole and BLACK Quick Pin.

Fasten Buffer Support Plate [**D**] to the rear of the Top Plate [**A**] using 2 Jig Screws [**G**].

For AR15/9/45 lowers, use the inner two mounting points.

For AR10/LR308 lowers, use the outer two mounting points.

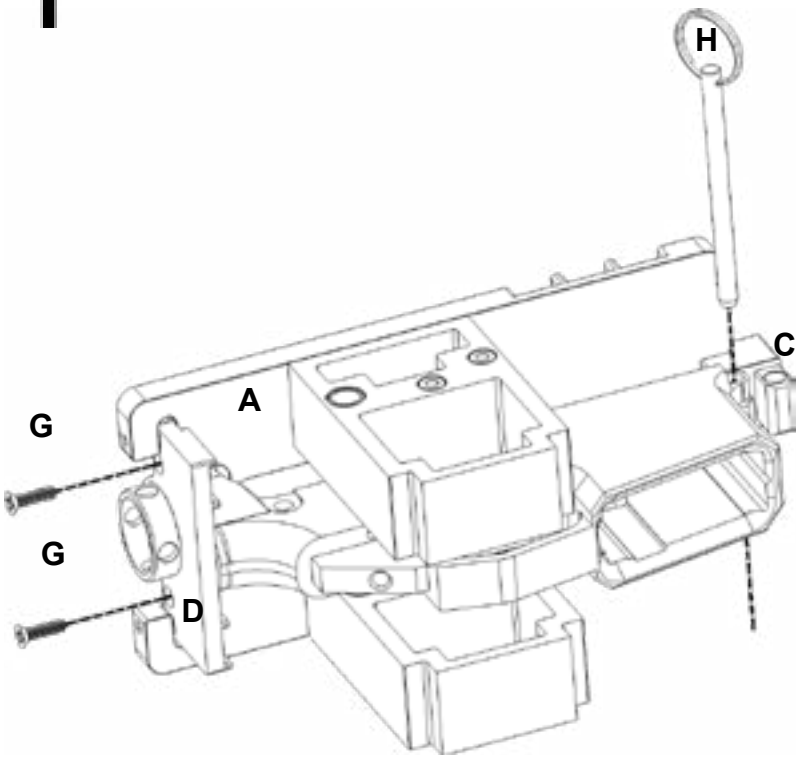

FIG. 7

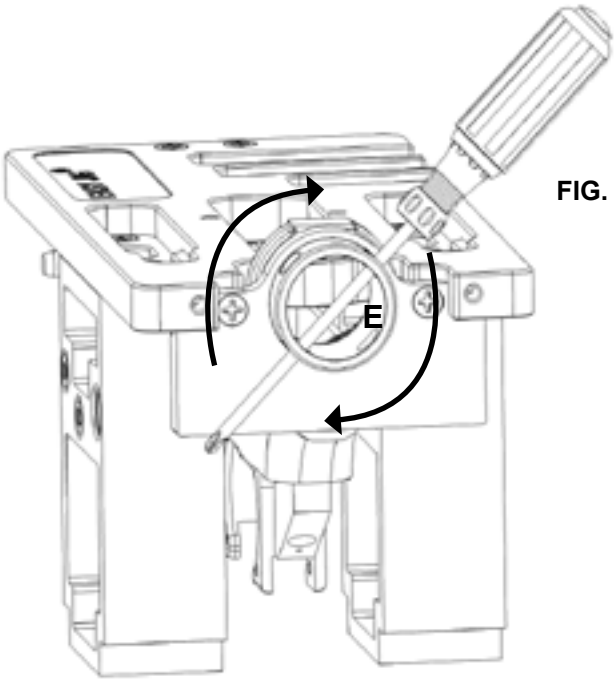

FIG. 8

Tighten the Buffer Screw [**E**] by inserting a small screwdriver or hex wrench through two holes and turning the Buffer Screw. When using a screwdriver, or a long hex wrench, use caution to not over torque the buffer screw.

Attach the Drill Guide [**F**] to the Top Plate [**A**] securely using 2 Jig Screws [**G**].

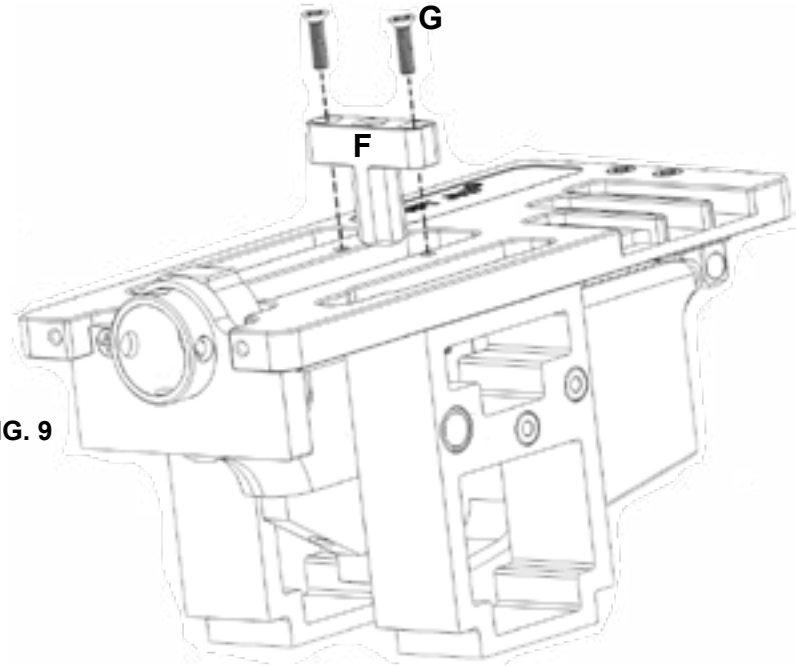

FIG. 9

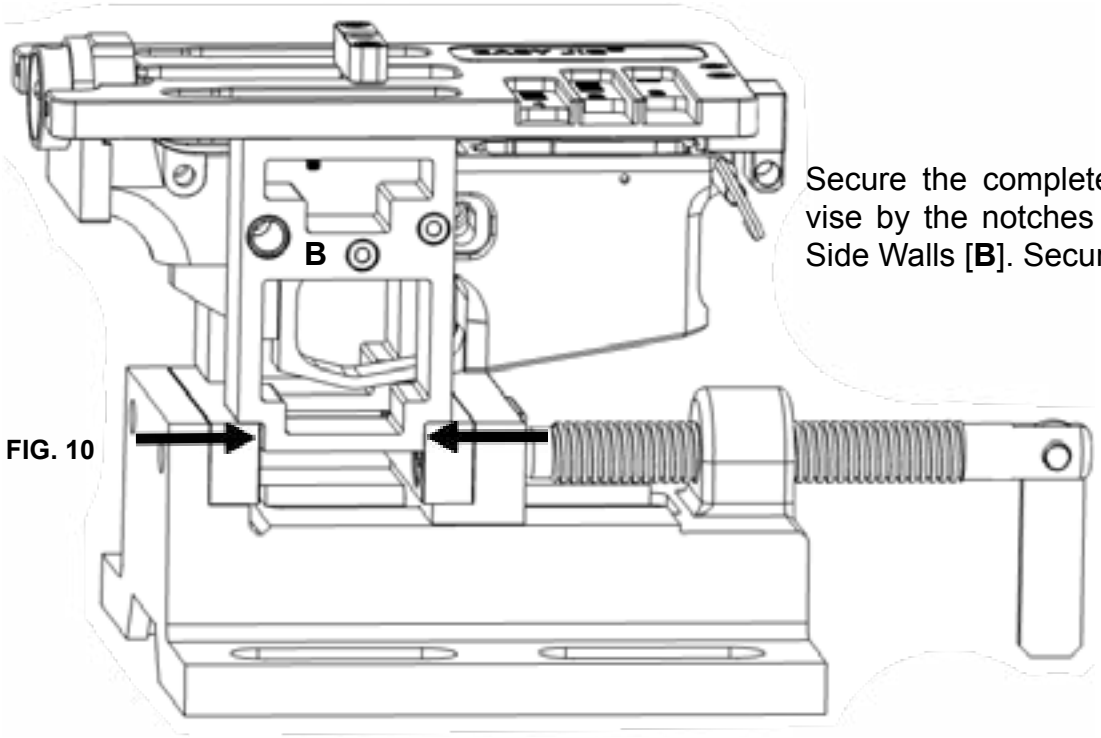

FIG. 10

Secure the completed jig assembly in a vise by the notches at the bottom of the Side Walls [**B**]. Securely tighten vise.

NEVER CLAMP THE JIG BY THE FACES OF THE SIDE WALLS. DAMAGE WILL OCCUR.

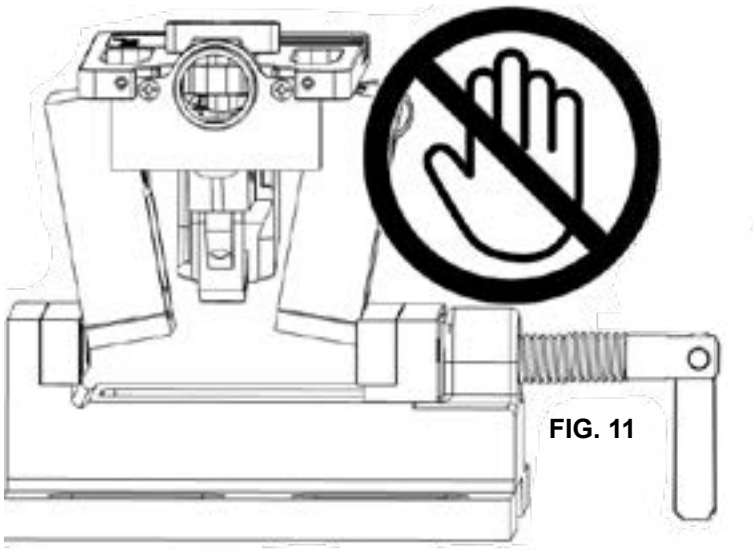

FIG. 11

PILOT HOLE DRILLING

Spray cutting fluid into Drill Guide [**F**] hole and insert the 21/64” drill bit. Do not start the drill until the bit is fully inserted and touching the lower. Using care to keep to the drill bit straight and perpendicular to the receiver, begin drilling using a drill speed of ≈ 2500 to 4,000 RPM. Use consistent, moderate pressure. It is important to periodically pull the drill bit out of the Drill Guide to clear chips. Continue to apply cutting fluid liberally. Drill until the bit exits the bottom of the receiver.

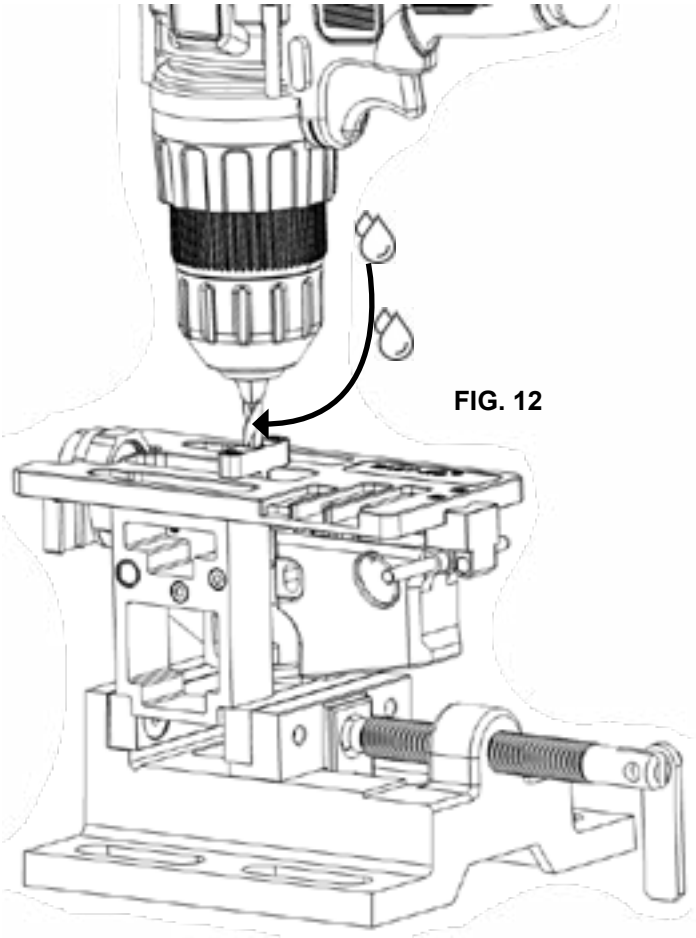

FIG. 12

CAUTION -When using a long drill bit with a lower receiver which has an integrated trigger guard, use caution not to drill through the trigger guard.

Once the drill has cleared the lower receiver, remove the Drill Guide [**F**] by removing the 2 Jig Screws [**G**].

ROUTER ADAPTER PLATE (RAP) INSTALLATION*

R1 - Before proceeding, unplug the router and remove the factory router plate and adjustable base from the router to expose the collet and spindle. **REMOVE the collet nut and collet**. Make sure the spindle and SpeedMill™ are clean and free of any burrs or debris. Imperfections on the surface of the spindle can impact the finish quality. **DO NOT USE** the collet or collet nut with the router.

Thread on the correct size SpeedMill™ for your router. **Make sure the collet was removed from the spindle.** Tighten with a wrench. The SpeedMill™ is a precision thermal holder that secures a custom designed solid carbide end mill with proprietary flute geometry designed for milling aluminum with a handheld router. Carbide is known for its durability, however take care not to drop or hit the SpeedMill™ as it can chip and damage the end mill.

If the SpeedMill™ does not fit the router, you have the wrong size SpeedMill™. Please refer to the Router Compatibility Chart on page 19 for router compatibility information.

R2 - Reinstall the router's factory base, but do not install the factory baseplate. Take 2 of the 4 RAP Screws included with your jig and check that the screws match the thread pitch on router base, and thread easily into the base. You will use the 2 screws to attach the RAP to your router.

If the screws do not thread easily, you may need to purchase truss or pan head screws that match the thread pitch on your router. Never use tapered head screws to mount the RAP.

With the thick portion of the SpeedMill™ going through the RAP bearing, align the two screw holes of the router's base (on the opposite side of the router's accessory mount) with the holes in the RAP. Loosely thread the 2 router adapter screws [**K**] through the RAP [**J**] and into the router's base.

FIG. 13

*For 80% Arms FST-1 Router and Makita® RT0701C style compact routers.

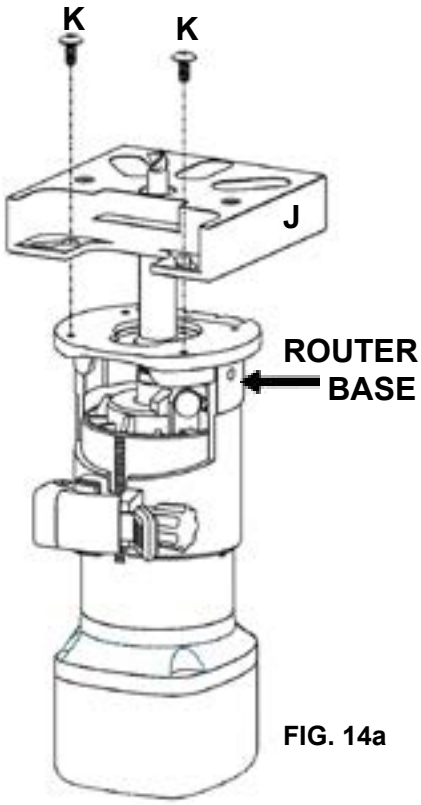

FIG. 14a

Align and loosely mount the Side Adapter Block [**Q**] to the back of the router using the router's accessory mounting hole and one of the side block screws [**S**] or [**R**] which fits your router. Loosely finger tighten so the side adapter block is flush with the router but can still slide up and down along the router accessory rail.

Loosely thread a router adapter screw through the Router Adapter Plate ("RAP") [**J**] going into the Side Adapter Block. Align the Side Adapter Block so it is touching and flush with the router and the RAP. Fully tighten the RAP screw [**K**]. Next, fully tighten the side adapter block screw [**S**] or [**R**]. Fully tighten the two other RAP screws [**K**].

WARNING: Check that the lock/latch on your router's adjustable base is tight and functioning properly. Press against the router RAP to ensure the router base does not slip under pressure. If it is not secure and slips while milling, damage can occur to the lower receiver, SpeedMill™, and jig as well as possible harm to self.

FIG. 14b

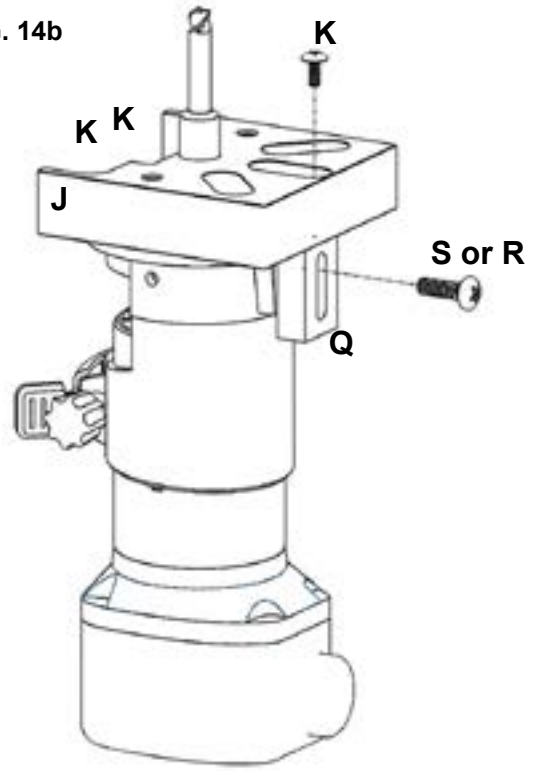

FIG. 15

ALTERNATE ROUTER ADAPTER PLATE INSTALLATION

A number of compact routers will accept all 4 RAP screws and will not require using the Side Adapter Block. After completing step **R1** on page 12 from the "ROUTER ADAPTER PLATE (RAP) INSTALLATION" section, reinstall the router's factory base, but do not install the factory baseplate. Take all 4 of the RAP Screws included with your jig and check that the screws match the thread pitch on router base, and thread easily into the base.

If the screws do not thread easily, you may need to purchase truss or pan head screws that match the thread pitch on your router to mount the RAP. Never use tapered head screws to mount the RAP.

With the thick portion of the SpeedMill™ going through the RAP bearing, align all four screw holes of the router's base with the slots in the RAP. The cutout area of the RAP should be facing the front of the router as shown. Fully tighten the 4 router adapter screws (**K**) through the RAP into the router's base.

WARNING: Check that the lock/latch on your router's adjustable base locks tight and functions properly.

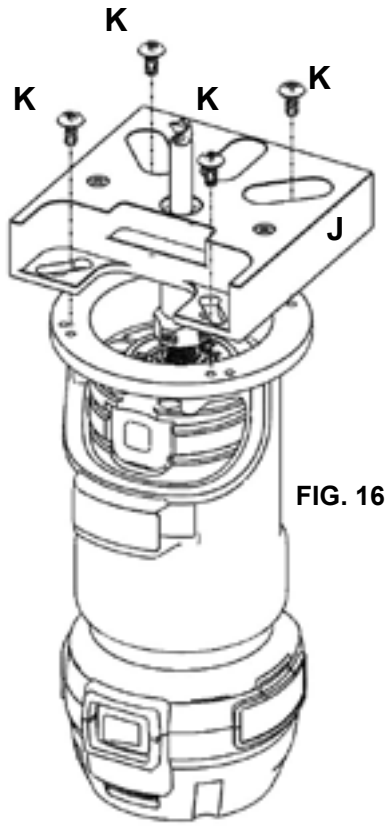

FIG. 16

LARGE ROUTER ADAPTER PLATE INSTALLATION

If you are using a large or full-size router, you may need the Full Size Router Adapter Plate (FSRAP) that is sold separately.

Remove the factory base from the router and install the Full Size Router Adapter Plate over the SpeedMill™ using three of the screws removed from your router's base.

Adjust the router's base depth as necessary to ensure the thicker part of the SpeedMill™ passes through the center hole and bearing of the RAP.

Attach the RAP To the Full Size Router Adapter Plate using the 3 of the 4 router adapter plate screws (**K**) provided.

WARNING: Check that the lock/latch on your router's adjustable base is tight and functions properly.

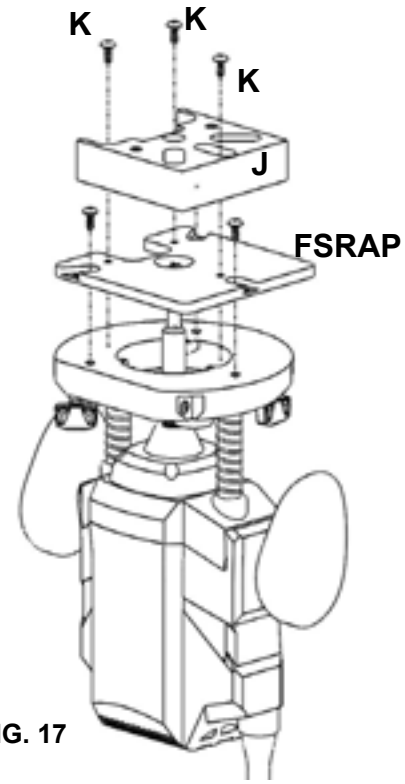

FIG. 17

FCG MILLING STEP 1

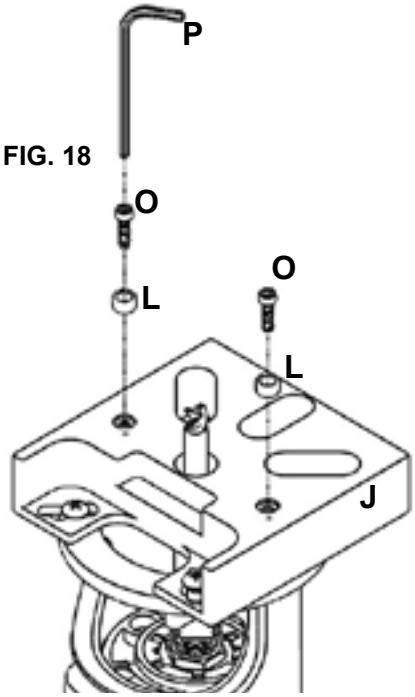

FIG. 18

Note: Milling step #1 stops at the depth of the receiver's rear shelf.

M1 - Install Short Guide Pins [**L**] to Router Adapter Plate [**J**] using the 2 Guide Pin Screws [**O**] and the provided 7/64" Hex Wrench [**P**]. Open end of the pins should be facing up. Make sure pins are fully seated. Do not over tighten.

M2 - Set end mill depth to the start of the first hash mark of Depth Gauge #1 by holding the base of Router Adapter Plate [**J**] flush against the edge of the Top Plate [**A**]. Make sure the Guide Pins are not caught between the Router Adapter Plate and Top Plate when setting the depth. Make sure to lock the router depth adjustment latch after each depth setting.

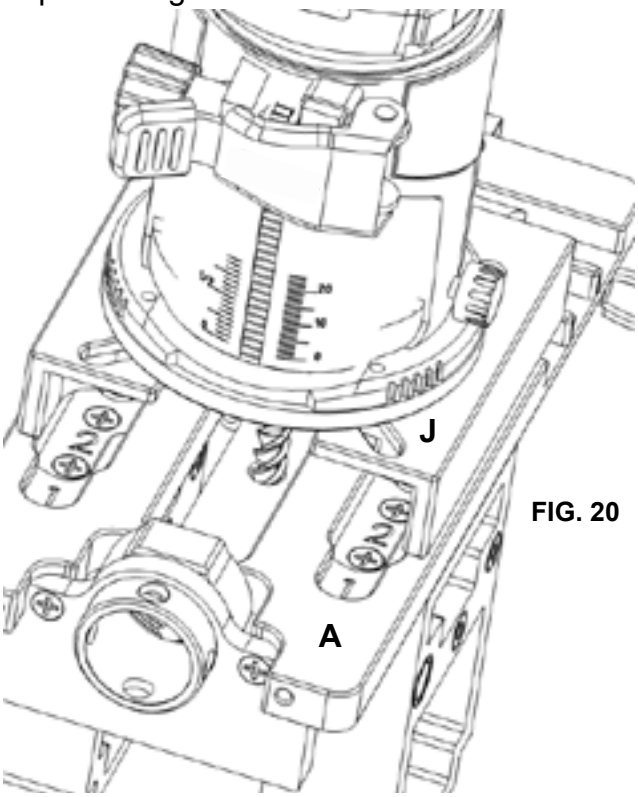

FIG. 20

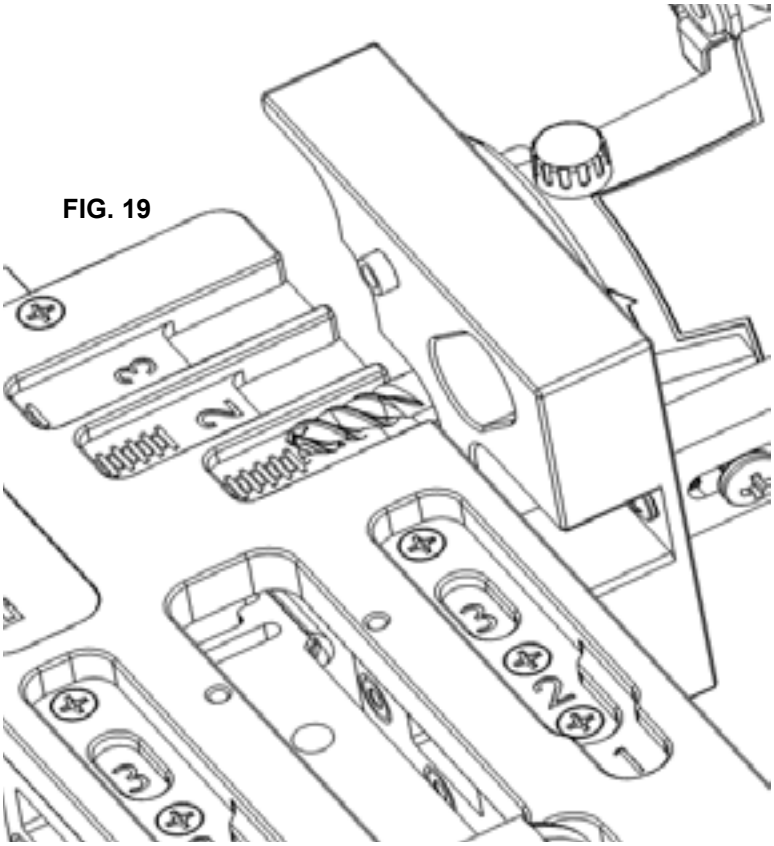

FIG. 19

M3 - Place the Router Adapter Plate [**J**] flat on the Top Plate [**A**] with the end mill centered within the pilot hole and the Guide Pins positioned inside guide cavity template on each side. Make sure the end mill is not touching the edges of the pilot hole or any other portion of the lower. Spray cutting fluid over the top of the lower that will the milled. Hold the router firmly with both hands and apply moderate downward pressure. Turn on the router.

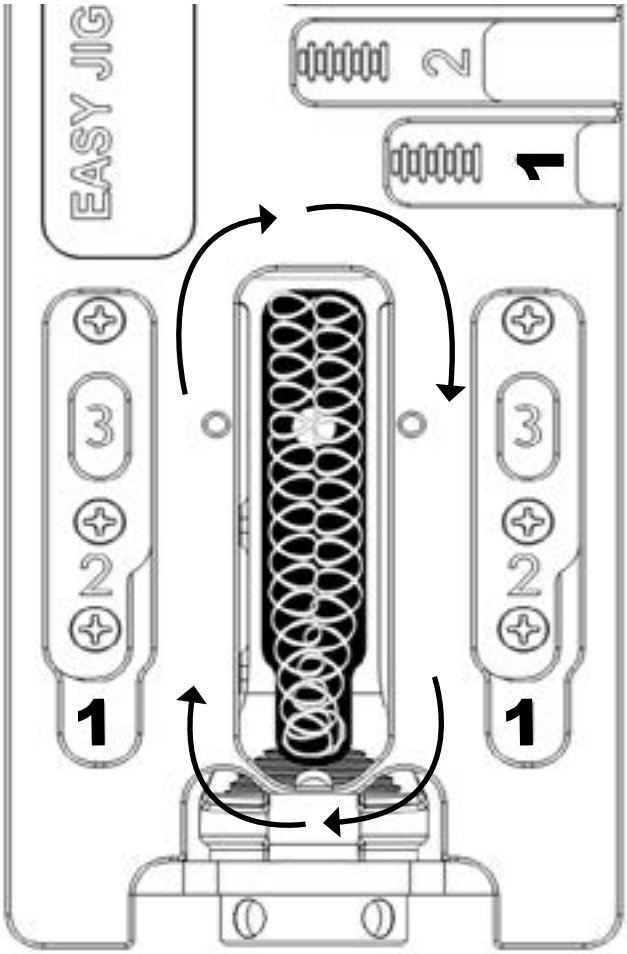

FIG. 21

M4 - Mill the entire area of guide cavity #1 shown in solid black. Begin milling using the best practices outlined previously using small circular clockwise overlapping motions, clearing away all material for this pass.

This step will leave some material along the perimeter of the pocket which will be cleaned up in step **M5**.

FIG. 22

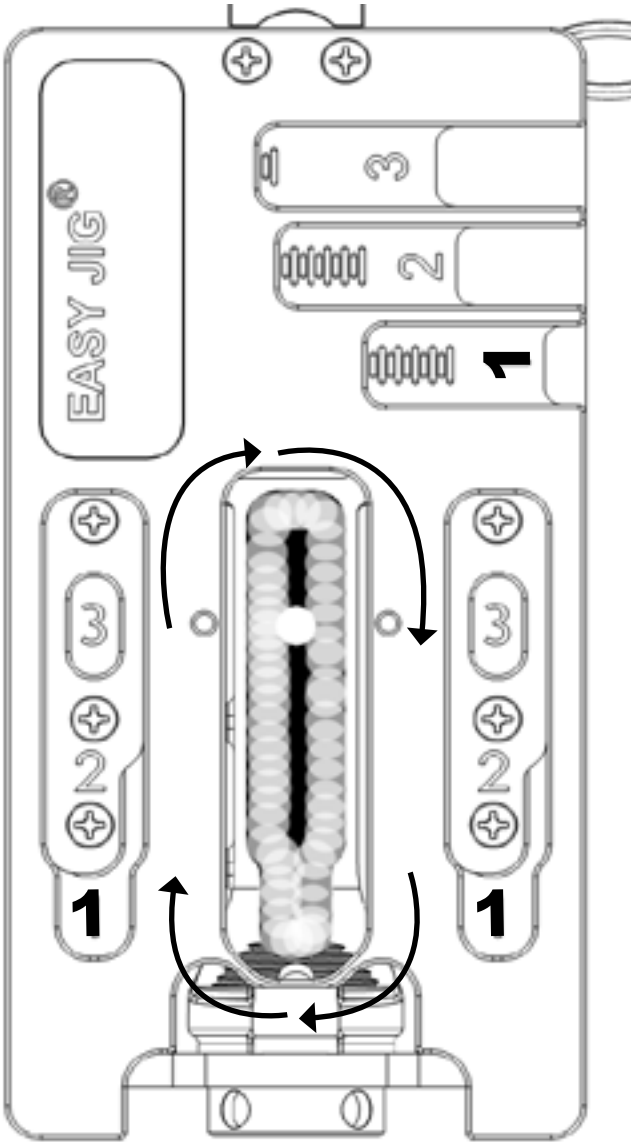

M5 - Slowly trace the entire edge perimeter area of the guide cavity template. Trace perimeter twice or until material is no longer being removed.

M6 - Turn off router and set end mill depth to the next hash mark in template #1. Mill the next pass following the same method and process as outlined in steps **M2-M6**.

Continue milling in this manner, adjusting end mill depth by 1 hash mark or less per pass until you have milled the entire area of guide cavity #1 to the full depth of depth gauge #1. Spray cutting fluid on the lower before starting each new pass.

End mill tip should touch the end of depth gauge #1 for the last pass depth.

Tip: Adjusting the depth of cuts by half of a hash mark or less at a time will take longer but result in smoother surface finish.

STOP! BEFORE CONTINUING TO "DEPTH GAUGE #2", MEDIUM GUIDE PINS [M] MUST BE INSTALLED FIRST.

FCG MILLING STEP 2

Unplug router and remove Short Guide Pins [**L**] and install Medium Guide Pins [**M**] using the 7/64” Hex Wrench [**P**]. Do not over tighten.

Note: Milling step #2 will stop at the depth of the receiver’s FCG pocket floor.

Set end mill depth to the start of first hash mark of depth gauge #2 as done in step **M2** but using depth gauge #2.

Mill the area of guide cavity #2 shown in solid black.

Set end mill depth to the next hash mark and mill the next pass following the same method and process as outlined in steps **M3-M6** but using depth gauge #2.

Continue milling in this manner, adjusting end mill depth by 1 hash mark or less per pass until you have milled to the end of “depth gauge #2”. Apply cutting fluid for each pass.

End mill tip should touch the end of depth gauge #2 for the last pass.

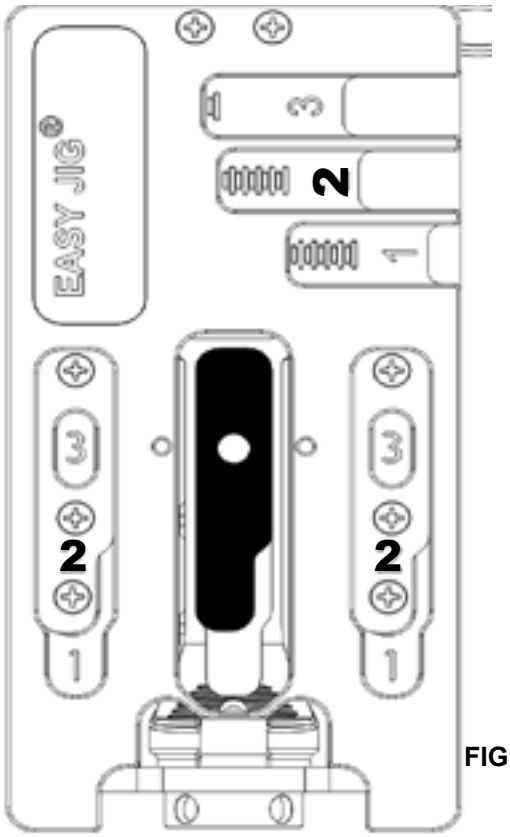

FIG. 23

STOP! BEFORE CONTINUING TO “DEPTH GAUGE #3”, LONG GUIDE PINS [N] MUST BE INSTALLED FIRST.

TRIGGER SLOT MILLING STEP 3

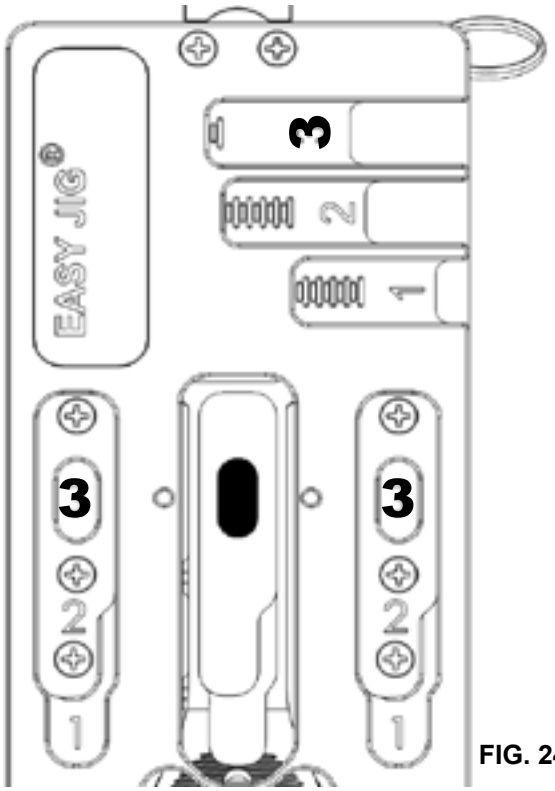

FIG. 24

Unplug router and remove Medium Guide Pins [**M**] and install Long Guide Pins [**N**] using the 7/64” Hex Wrench [**P**]. Do not over tighten.

Set end mill depth to the first hash mark of depth gauge #3 as was done in step M2 but using depth gauge #3.

Mill the entire area of guide cavity #3

Set end mill depth to the next hash mark and mill the next pass following the same method and process as outlined in steps M3-M5 but using depth gauge #3.

Continue milling in this manner, adjusting end mill depth by 1 hash mark or less per pass until you have milled to the end of “depth gauge #3”. Apply cutting fluid for each pass.

End mill tip should touch the end of depth gauge #3 for the final pass.

FIRE SELECTOR AND PIN HOLES DRILLING

D1 - Firmly clamp the Jig assembly in the vise by the front and rear edge of the Side Wall [**B**], with the Side Wall facing up. Ensure that the assembly is level. Spray cutting fluid into the large drill bushing and insert 3/8” drill bit. Do not start drill until bit is fully inserted in the drill bushing and touching the lower receiver. Apply moderate pressure and drill through **ONLY ONE** side of the receiver wall at approximately 2,500 RPM.

D2 - Spray cutting fluid into both small drill bushings and insert 5/32” drill bit into either remaining drill bushing. Do not start drill until bit is fully inserted and touching the lower receiver. Apply moderate pressure and drill through **ONLY ONE** side of the receiver wall at approximately 3,000 RPM. Repeat for the other small drill bushing.

Flip the Jig Assembly over and repeat steps D1-D2 to drill holes through the other side of the receiver.

Use eye protection at all times when operating power tools.

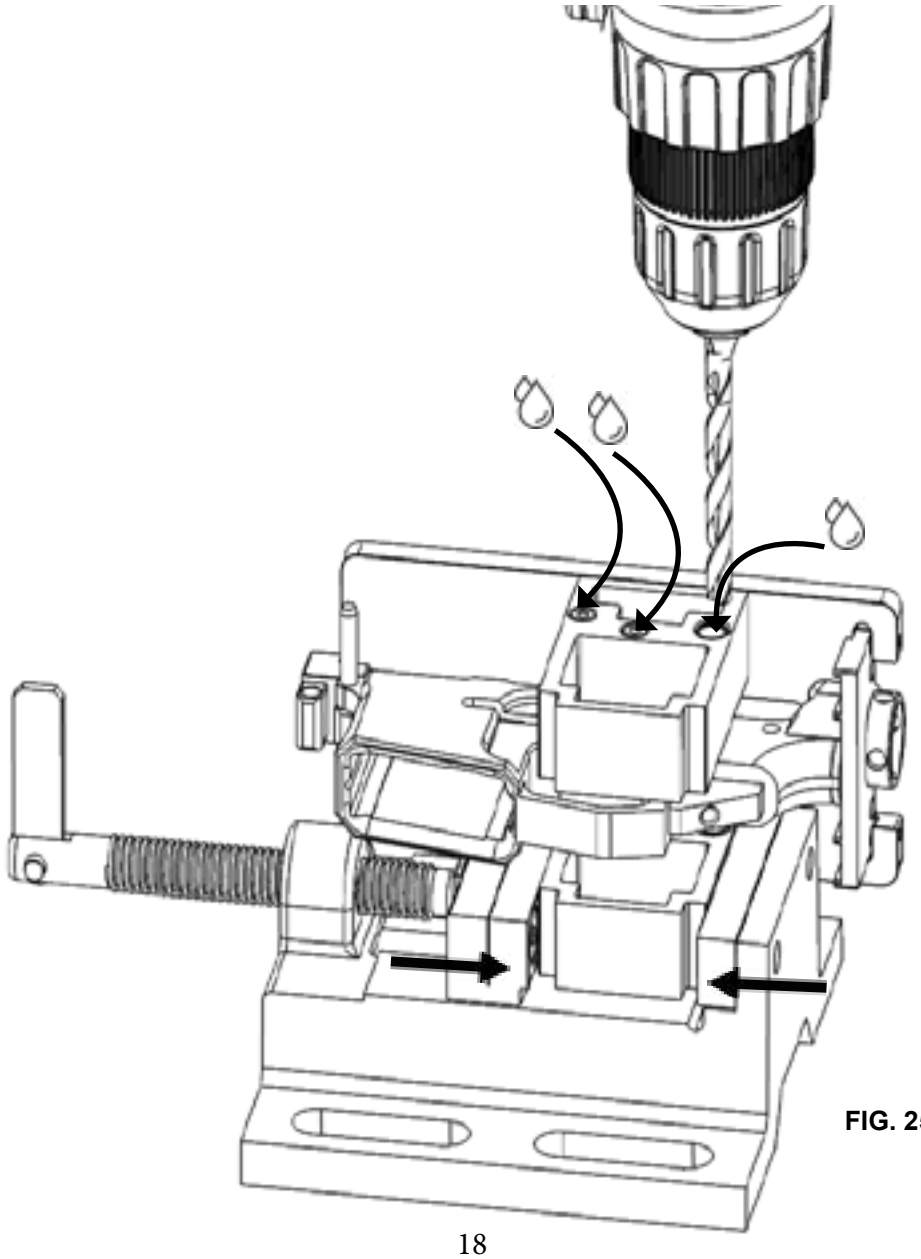

FIG. 25

ROUTER COMPATIBILITY

SpeedMill™ Size	Router
A/1	• Bosch PR10E* • DeWalt DWE 6000 • Porter-Cable 6435 • Bosch PR20EV* • Porter-Cable 6430 • Rigid R24012
B/2	• Craftsman 28212 • DeWalt DWP611 • Porter-Cable 450 • DeWalt DCW6008
C/3	• 80% Arms FST-1 • Bauer 19121 E-B • Makita RT0701C • Makita XTR01Z
D/4	• Craftsman 2767 • Craftsman 27683 • Craftsman 50429 • DeWalt DW616 • Hitachi M12VC • Porter-Cable 8902 • Skill RT 1322-00
Not Compatible	• Bosch GFK125CEN • DeWalt DW618 • Kobalt KR-124B-03 • Rigid R22002 • Ryobi R1631K • Bosch 1617 • Bosch 1617EVS • Milwaukee M18

***REQUIRES ADDING MORE THROW TO THE ADJUSTABLE BASE BEYOND THE DEFAULT LIMIT OF THE ROUTER TO BEGIN MILLING OF DEPTH GAUGE #1.**

ROUTER TIPS

Key considerations in selecting a router are the amount of runout and the ease of adjusting the depth of cut. During the milling process the depth of cut is adjusted multiple times. For the best experience a router that has an secure and easy to adjust depth of cut is recommended. Surface finish can vary considerably based on the amount of runout present in the router.

“Runout” in a milling router refers to how much the cutting tool (SpeedMill™) wobbles or isn’t perfectly centered when it’s spinning. Runout can happen when the tool holder or collet may not grip the bit perfectly straight, or from wear and imperfections in the spindle or chuck where the bit is held.

The patented SpeedMill™ eliminates the need for a collet and removes that source of runout. However, imperfections in the spindle can still cause runout. The 80 Percent Arms FST-1 router is custom manufactured with a precision ground spindle to significantly reduce runout compared to off-the-shelf routers and is recommended for superior finish quality.

Avoid low cost discount tool store routers which often have poor quality control. Runout can be significant causing extreme vibration, poor surface finish, and damage to the SpeedMill™. Most name brand routers will provide satisfactory results. Measuring the runout of your router is advisable if you are not getting a smooth near CNC quality finish with your Easy Jig®.

FINAL FINISHING

Remove Buffer Screw [**E**], loosen or completely unscrew Buffer Support Plate [**D**], and pull out Quick Pin [**H**] or [**I**]. The finished receiver can now be removed from the jig. Remove lower from jig carefully.

Clean the receiver of any remaining chips and cutting fluid. Do not use compressed air to avoid blowing sharp chips into the air.

Inspect all the edges of all the holes drilled for burrs. Pay close attention to the safety selector detent hole.

Due to variances in 80% lower receivers and routers from different manufacturers, tolerance stacking is normal. Minor dimensional differences such as the thickness of the fire control pocket walls are not a defect and mil-spec tolerances will still allow for the lower to function as intended.

YOUR LOWER IS COMPLETE

Congratulations on completing your lower receiver!

It is not necessary to paint or coat the milled raw aluminum pocket of your lower. Raw aluminum when exposed to air quickly forms a protective thin layer of aluminum oxide that offers basic protection under most conditions.

This achievement showcases your skill and dedication. Remember: your lower receiver is now a firearm, bringing the responsibility to comply with all firearm laws and regulations. Familiarize yourself with local, state, and federal laws to ensure responsible use and storage. In addition to legal compliance, we encourage you to support grassroots organizations dedicated to preserving our Second Amendment rights. By engaging with and supporting these organizations, you contribute to a community that values safety, education, and the preservation of our rights. We thank you for choosing our jig and trust you have created something you can proudly display and use for a lifetime. Your participation in this community not only reflects your commitment to craftsmanship but also to the principles that underpin our Second Amendment.

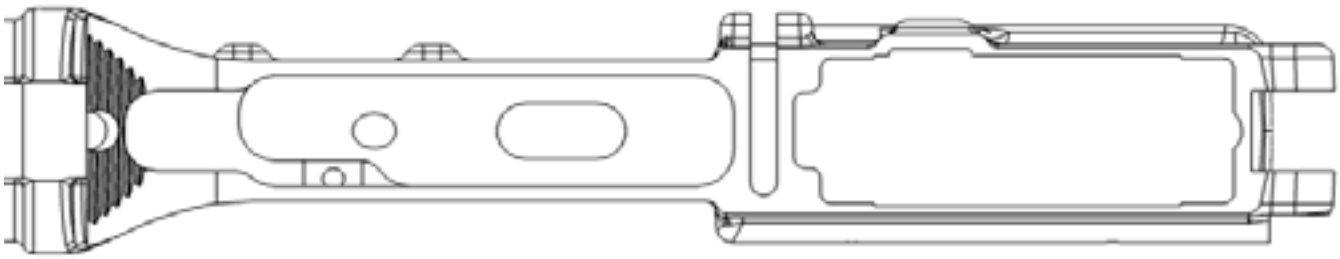

FIG. 26

JIG WARRANTY AND SUPPORT

We understand you have chosen to spend your hard earned money on our jig, and because of that, we strive for 100% customer satisfaction.

This jig carries a lifetime warranty valid for the original owner against manufacturing defects. Normal wear is not covered. To obtain warranty repairs, please contact your dealer or retailer. All returns must have an RMA number for the warranty claim to be processed.

In the unlikely event you experience any trouble using your jig, please contact your dealer or retailer for support. Please also contact your dealer or retailer with any questions regarding the use of the jig or for replacement jig parts.

LOWER REPLACEMENT WARRANTY

In the unlikely event a mistake is made when finishing an 80 Percent Arms 80% lower receiver milled with our Easy Jig®, which causes damage to the lower receiver, a replacement lower will be provided for 50% off the regular non-sale price provided the following conditions are met:

• You are the original owner of the Easy Jig®
• You were milling an 80 Percent Arms 80% lower
• You were using 80% Arms branded SpeedMill™ end mill and drill bits
• You have proof of purchase for the 80% Arms Easy Jig®, lower, and the tooling
• Proof of damage and how the damage occurred are provided to 80 Percent Arms

Exclusions:
• Poor finish to the FCG pocket from using aftermarket tooling (end mills and drill bits)
• Poor finish to the FCG pocket from using non 80 Percent Arms routers with excessive runout
• Minor cosmetic damage

Extensive testing and patented design technology makes the Easy Jig® system the easiest, fastest, and most fool proof way to finish 80% lowers. Our USA made tooling is custom designed to mill lowers using hand held routers while minimizing chatter and binding to ensure long life and superior results. The 80 Percent Arms FST-1 Router is manufactured to very tight runout tolerances for exceptionally smooth surface finish results. Use 80 Percent Arms tooling for best results and extra warranty benefits.

TRADEMARK / PATENTS

“Easy Jig®” is a registered trademark or trademark of 80 Percent Arms. The products covered by this manual are protected under copyright, patent, and other intellectual property rights. The router based Easy Jig® milling system has multiple patents and is the exclusive intellectual property of 80 Percent Arms. Unauthorized use of the 80 Percent Arms router milling system, in whole or in part, is prohibited. Patent violations are strictly enforced. All images and content in this manual are copyright© 80 Percent Arms. Unauthorized duplication or distribution of the contents of this manual without the written authorization by 80 Percent Arms is prohibited. No part of this manual may be reproduced, stored in a retrieval system, or transmitted, in any form, or by any means, electronically, mechanically, by photocopying, or otherwise, without the prior written approval from 80 Percent Arms.

ADDITIONAL IMAGES

FIG. 27

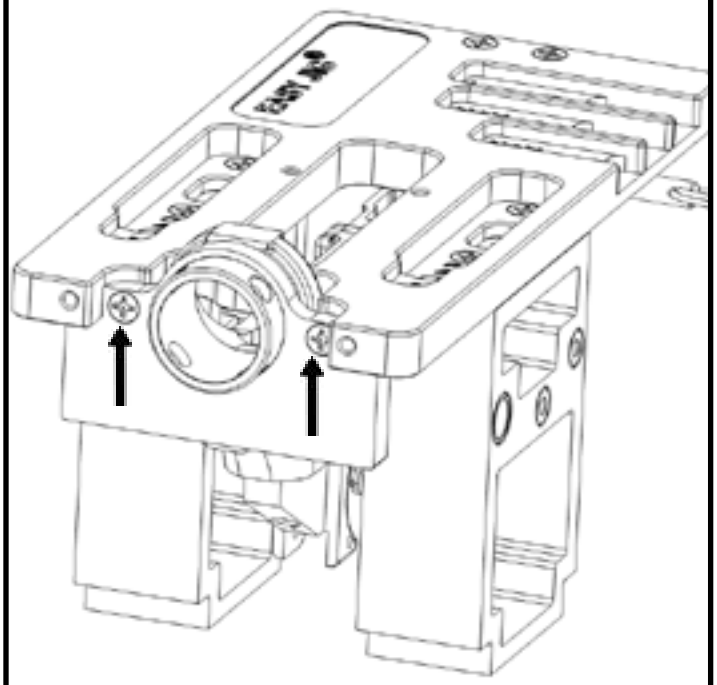

BUFFER SUPPORT PLATE **[D]** shown mounted for AR15, AR9, AR45 use.

FIG. 28

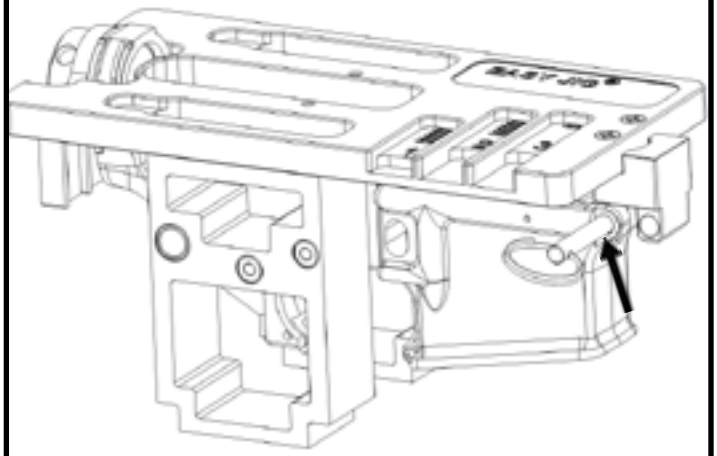

AR15 QUICK RELEASE PIN **[H]** shown location for AR15, AR9, AR45 use.

FIG. 29

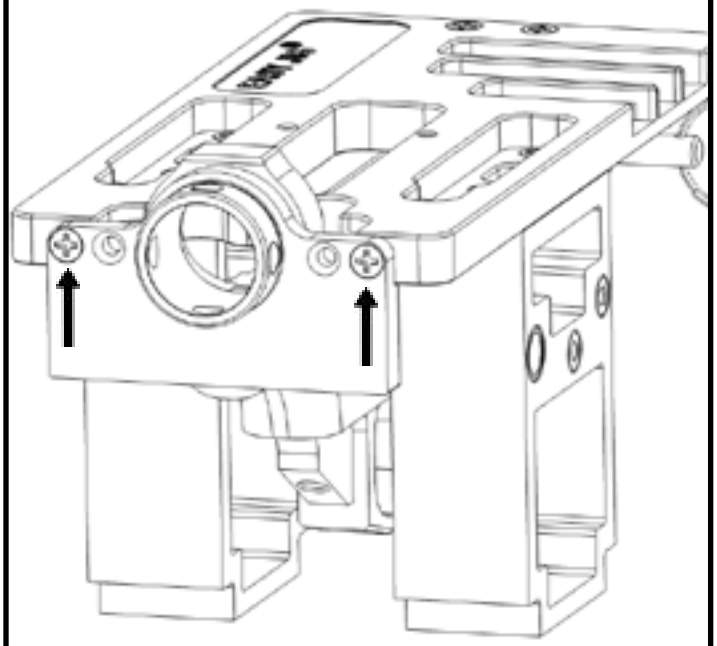

BUFFER SUPPORT PLATE **[D]** shown mounted for LR10, AR308 use.

FIG. 30

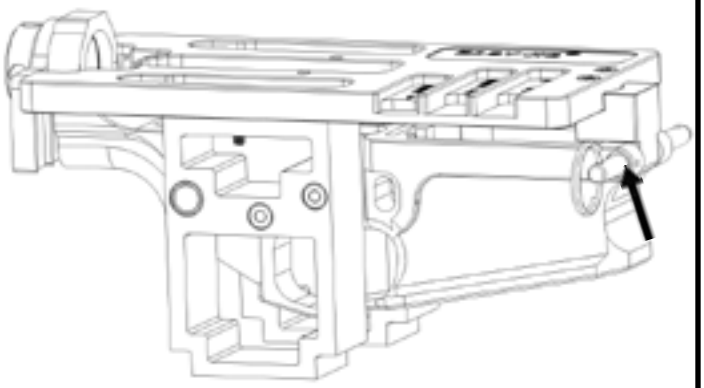

308 QUICK RELEASE PIN **[I]** shown location for LR10, AR308 use.

FIG. 31

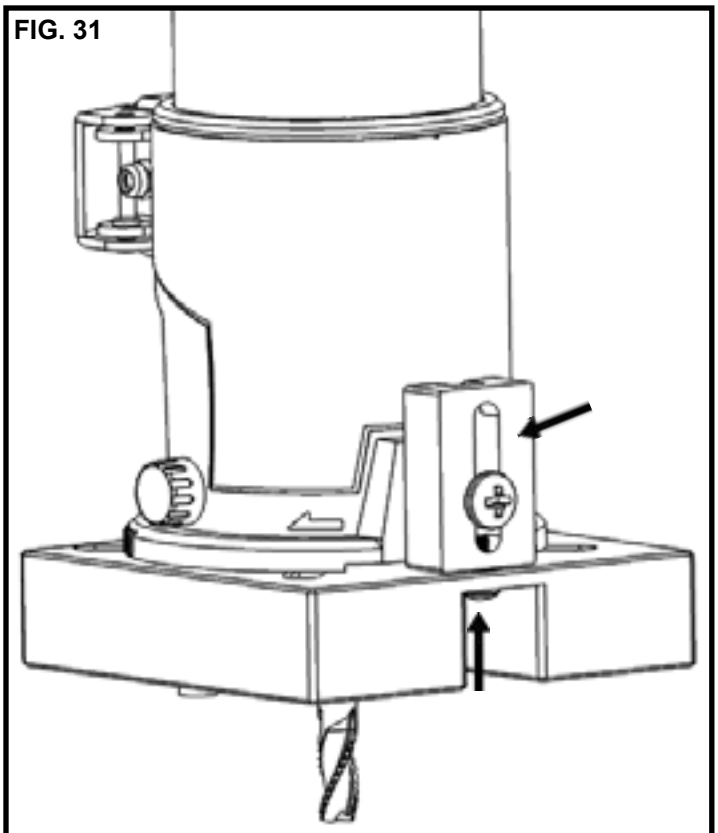

ROUTER SIDE BLOCK ADAPTER **[Q]** mounted to router base to secure the RAP **[J]** to the router.

FIG. 32

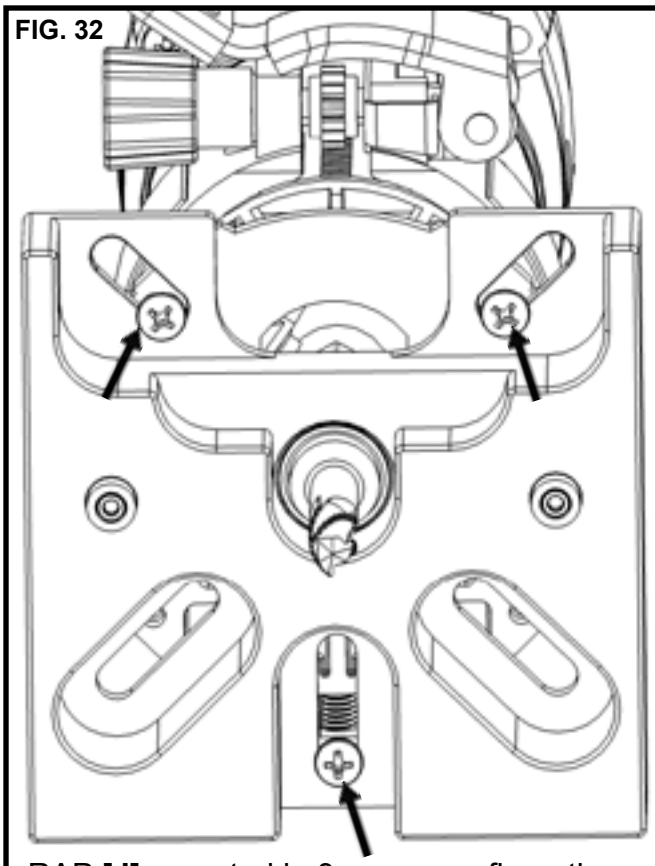

RAP **[J]** mounted in 3 screw configuration using ROUTER SIDE BLOCK ADAPTER **[Q]**.

FIG. 33

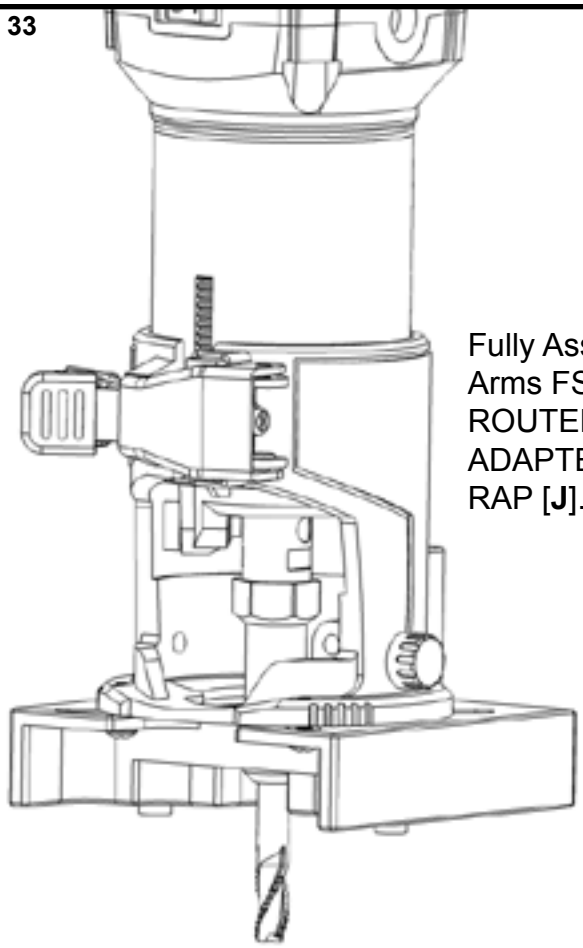

Fully Assembled 80 Percent Arms FST-1 Router using ROUTER SIDE BLOCK ADAPTER [**Q**] to mount the RAP [**J**].

RESOURCES

80 Percent Arms*
309 Palette Drive
Fort Worth, TX 76140
(949) 354-3767
www.80PercentArms.com

Second Amendment Foundation
12500 NE 10th Pl, Bellevue, WA 98005
(425) 454-7012
www.saf.org/

Firearms Policy Coalition, Inc. (FPC)
5550 Painted Mirage Road, Suite 320, Las Vegas, NV 89149
www.firearmspolicy.org

Tips & Tricks: Leveling a Drill Press Table
https://www.youtube.com/watch?v=caqbtHXj0mk&t=1s

Drill-press Table Squaring, High Precision - DIY
https://www.youtube.com/watch?v=PVUrb1VzfBg

*Product support, service, manuals, and replacement parts are prohibited from being provided by the manufacturers of jigs and frames or receivers and may only be available through an authorized dealer or retailer under recent ATF rules. 80 Percent Arms has ongoing challenges to the ATF to allow us to resume direct support for all of our products.

MADE IN USA

Copyright© 2025 80 Percent Arms